DocuSign Envelope ID: 449CD64D-37ED-4EB8-9D17-E4E36E1F0CF4

PROJECT REFERENCE NO.	SHEET NO.
17BP.14.R.205	2C-1

DOCUMENT NOT CONSIDERED FINAL UNLESS ALL SIGNATURES COMPLETED

STATE OF NORTH CAROLINA
DEPT. OF TRANSPORTATION
DIVISION OF HIGHWAYS
RALEIGH, N.C.

ROADWAY DETAIL DRAWING FOR
GUARDRAIL INSTALLATION

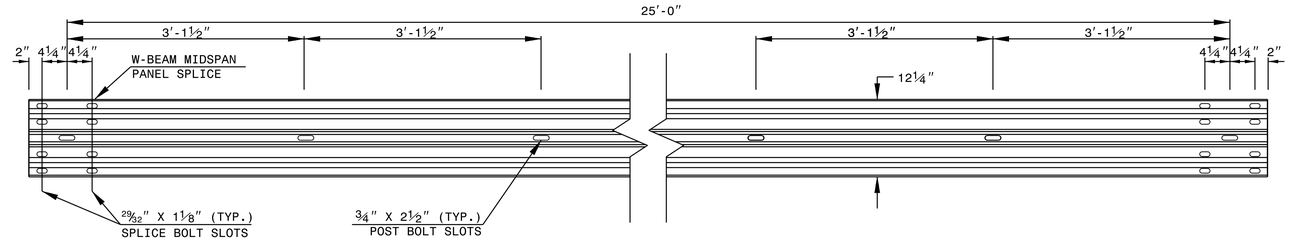

STANDARD W-BEAM GUARDRAIL

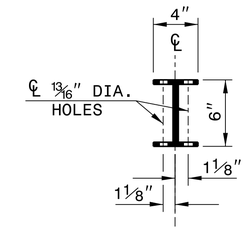

PLAN

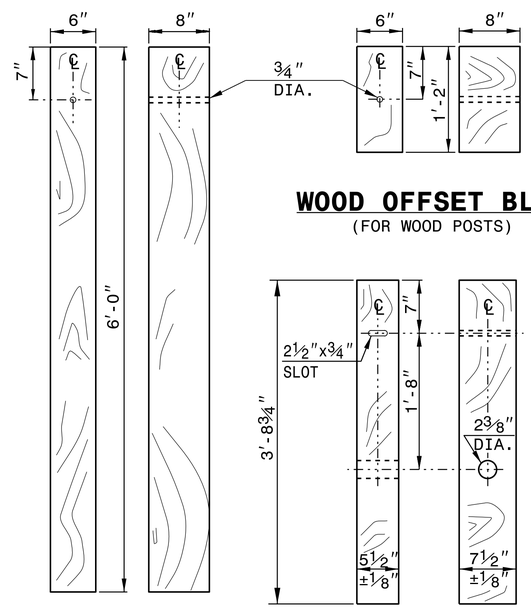

STANDARD LINE POST

SHORT WOOD BREAKAWAY POST

WOOD OFFSET BLOCK

(FOR WOOD POSTS)

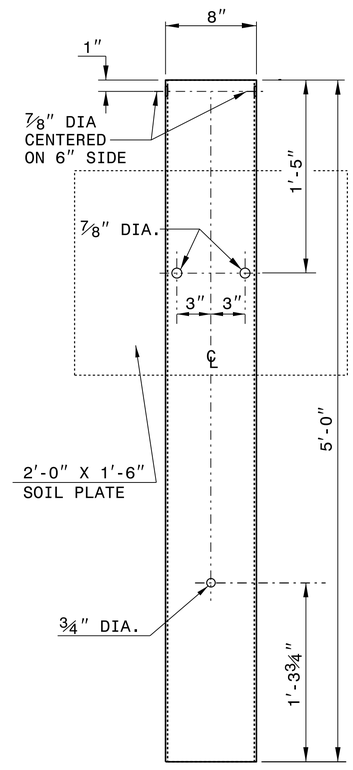

STEEL TUBE

TS 6"x8"x0.1875"

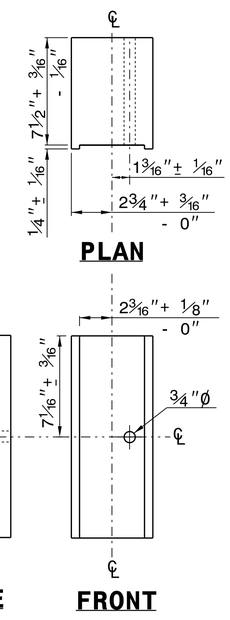

PLAN

SIDE

FRONT

ROUTED OFFSET BLOCK

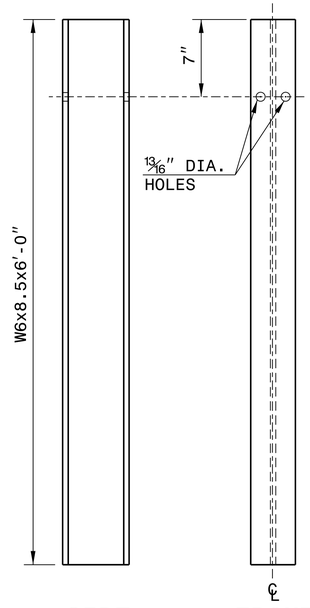

SIDE

FRONT

"W6" STEEL POST

SYSTEM PARTS

SHEET 6 OF 8
862D02

STATE OF NORTH CAROLINA
DEPT. OF TRANSPORTATION
DIVISION OF HIGHWAYS
RALEIGH, N.C.

ROADWAY DETAIL DRAWING FOR
GUARDRAIL INSTALLATION

SHEET 6 OF 8
862D02

CONTRACTS STANDARDS AND DEVELOPMENT UNIT
Office 919-707-6950 FAX 919-250-4119

SEE TITLE BLOCK

ORIGINAL BY: J.HOWERTON DATE: 3-7-2018
MODIFIED BY: DATE:
CHECKED BY: DATE:
FILE SPEC.: